BAR TYPE

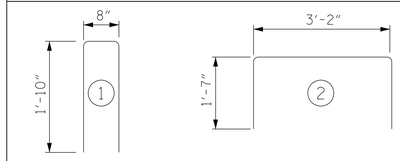

ALL BAR DIMENSIONS ARE OUT TO OUT

BILL OF MATERIAL

BAR	NO.	SIZE	TYPE	LENGTH	WEIGHT
A1	320	#4	1	4'-4"	926
B1	320	#5	2	6'-4"	2114
C1	48	#6	STR	19'-8"	1418
C2	32	#6	STR	15'-6"	745
REINFORCING STEEL				LBS.	5203
CLASS A CONCRETE				CU.YDS.	47.4

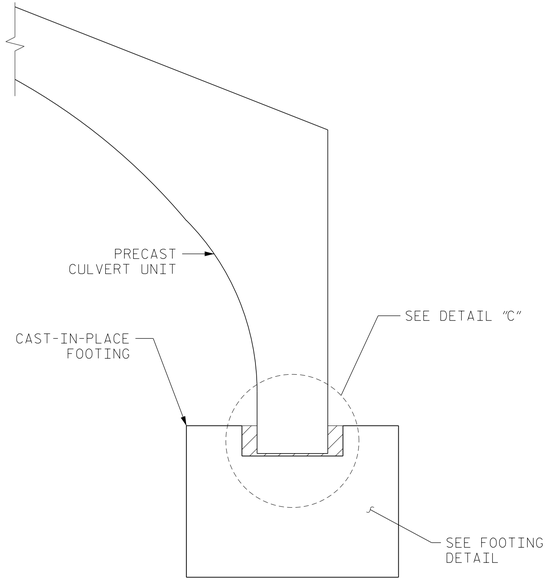

SECTION A-A

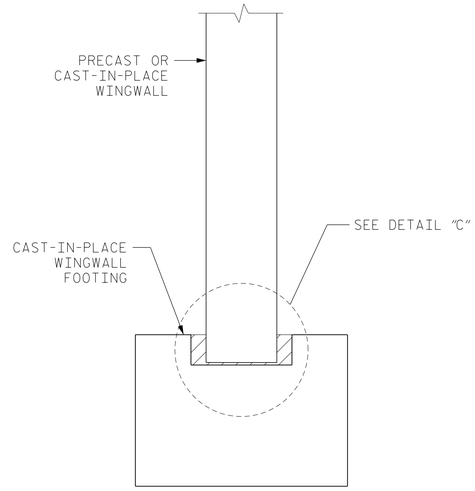

SECTION THRU WINGWALL

CONTRACTOR SUBMITTAL OF WORKING DRAWINGS FOR PRECAST CULVERT SHALL INCLUDE WINGWALLS.

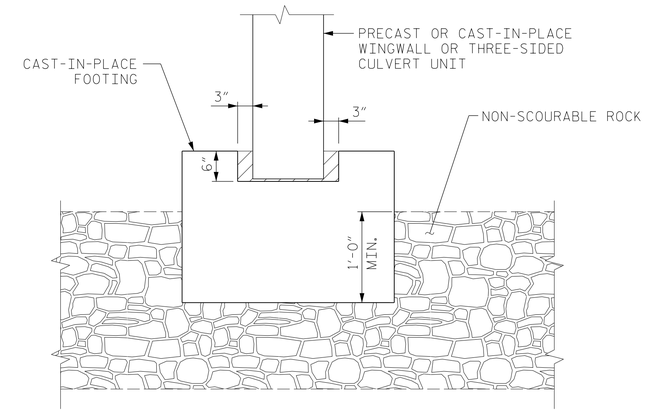

KEYED FOOTING DETAIL

SIDES OF ALL FOOTINGS SHALL BE IN CONTACT WITH NON-SCOURABLE ROCK FOR MINIMUM DIMENSION SHOWN

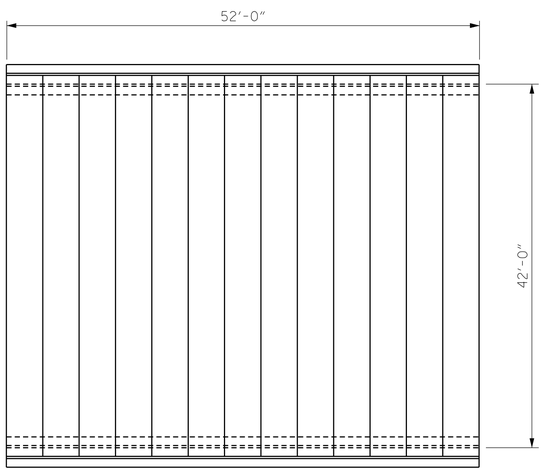

PLAN OF CONCRETE ARCH

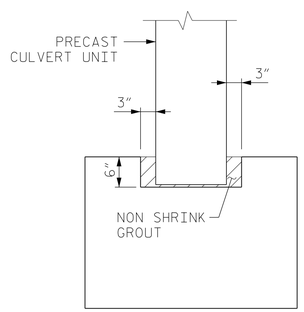

DETAIL "C"

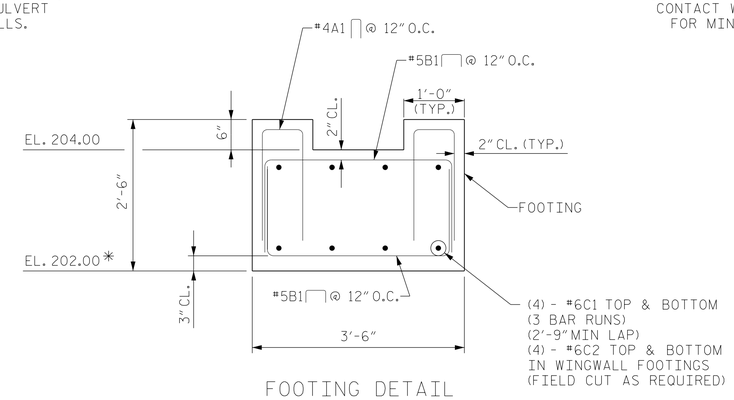

FOOTING DETAIL

* ADJUST BOTTOM OF FOOTING ELEVATION AS REQUIRED TO PROVIDE 1'-0" MINIMUM KEY INTO ROCK. EXTEND REINFORCEMENT AS REQUIRED.

PROJECT NO. 17BP.5.R.88

WARREN COUNTY

STATION: 12+35.00 -L-

SHEET 3 OF 4

NORTH CAROLINA PROFESSIONAL SEAL 11725 ENGINEER DAVID R. RUGGLES

DocuSigned by: David Ruggles C4627680DF414222 3/14/2022

DOCUMENT NOT CONSIDERED FINAL UNLESS ALL SIGNATURES COMPLETED

STEWART

Firm License No. C-1051
223 S. West St.
Suite 1100
Raleigh, NC 27603
T 919.380.8750
www.stewartinc.com

STATE OF NORTH CAROLINA
DEPARTMENT OF TRANSPORTATION
RALEIGH

PRECAST
REINFORCED CONCRETE
THREE-SIDED CULVERT
75° SKEW

REVISIONS						SHEET NO.
NO.	BY:	DATE:	NO.	BY:	DATE:	C-3
1			3			TOTAL SHEETS
2			4			5

DRAWN BY:	E. PHELPS	DATE :	4/18
CHECKED BY:	D. RUGGLES	DATE :	4/18
DESIGN ENGINEER OF RECORD:	D. RUGGLES	DATE :	4/18

17BP.5.R.88

1/31/2022
...\400_003_Warren_135_SMU_TS02_C-3.dgn
USER:ephelps