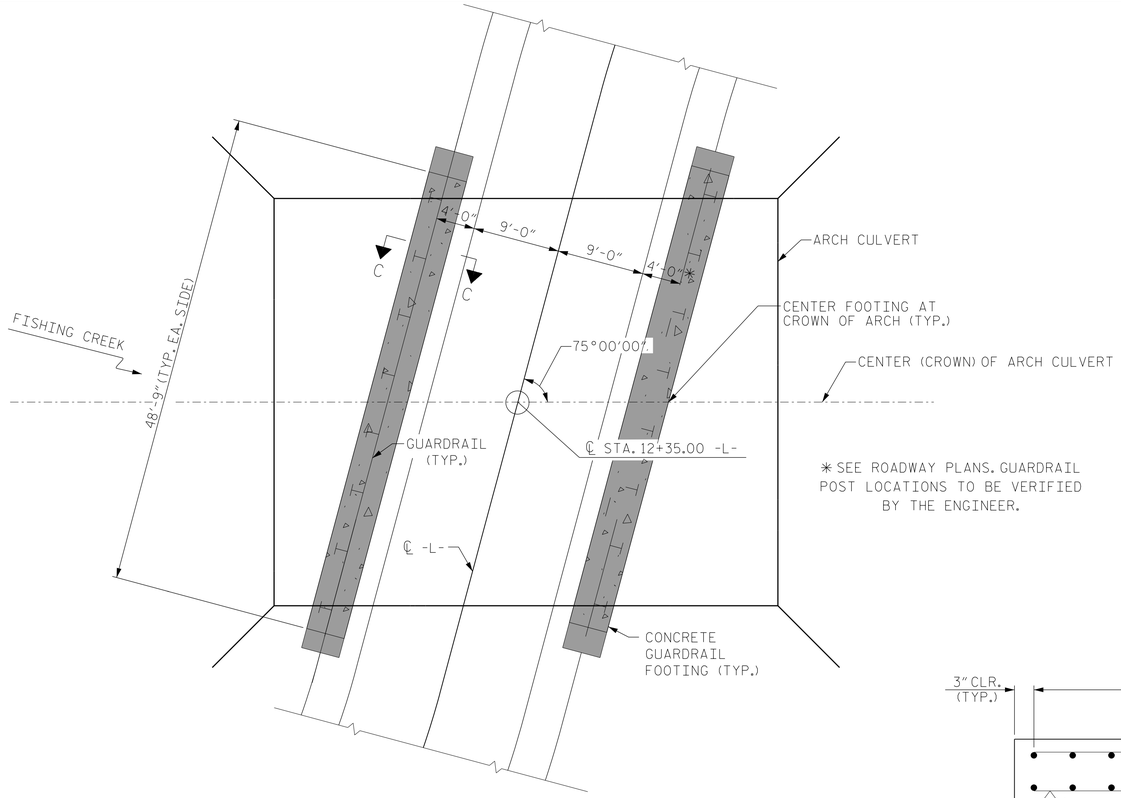

* SEE ROADWAY PLANS. GUARDRAIL POST LOCATIONS TO BE VERIFIED BY THE ENGINEER.

PLAN

BILL OF MATERIAL FOR ONE FOOTING (2 REQ'D)					
BAR	NO.	SIZE	TYPE	LENGTH	WEIGHT
A1	220	#4	STR	3'-6"	514
B1	32	#4	STR	22'-9"	486
REINFORCING STEEL				LBS.	1000
CLASS A CONCRETE				CU.YDS.	6.0

NOTES

EACH POST SHALL BE PROVIDED WITH A ½" X 1'-3" THREADED STEEL ROD WITH GALVANIZED NUTS AND WASHERS.

INSTALL RODS ON POSTS BEFORE CONCRETE IS CAST. POSTS SHALL BE PLACED IN FINAL POSITION BEFORE CONCRETE IS CAST.

PAYMENT FOR GUARDRAIL, POSTS, AND THREADED STEEL ROD WITH GALVANIZED NUTS AND WASHERS IS INCLUDED IN ROADWAY PAY ITEMS.

SLAB REINFORCING STEEL MAY BE SHIFTED AS NECESSARY TO CLEAR GUARDRAIL POSTS. CARE SHOULD BE TAKEN TO KEEP THE SHIFTING OF REINFORCING STEEL TO A MINIMUM.

TOP OF GUARDRAIL FOOTING IS APPROXIMATELY 0.75 FT BELOW FINISHED GROUND. INSTALL 2 LAYERS OF 30 LB. ROOFING FELT BETWEEN CROWN OF CONCRETE ARCH AND GUARDRAIL FOOTING.

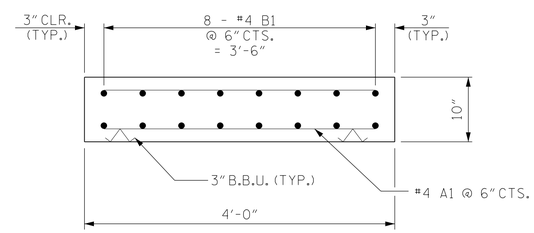

SECTION B-B

NOTE: LAYOUT REINFORCING STEEL SHOULD BE CONDUCTED TO AVOID CONFLICT WITH ANCHOR BOLT LAYOUT FOR GUARDRAIL ATTACHMENT.

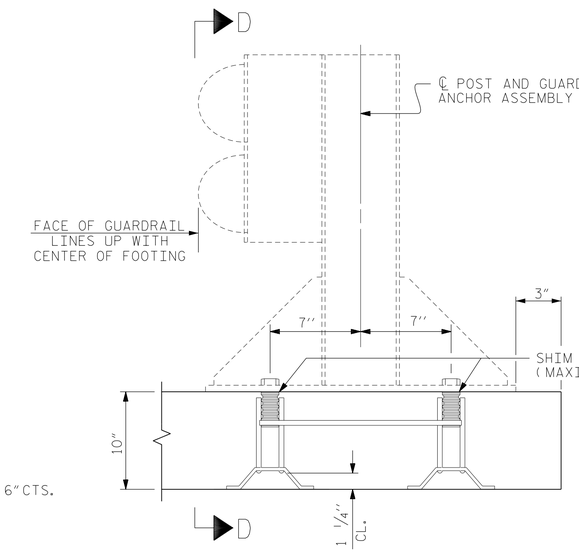

SECTION C-C

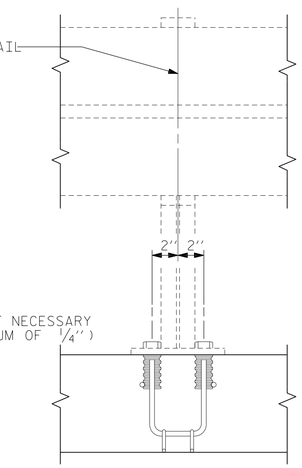

SECTION D-D

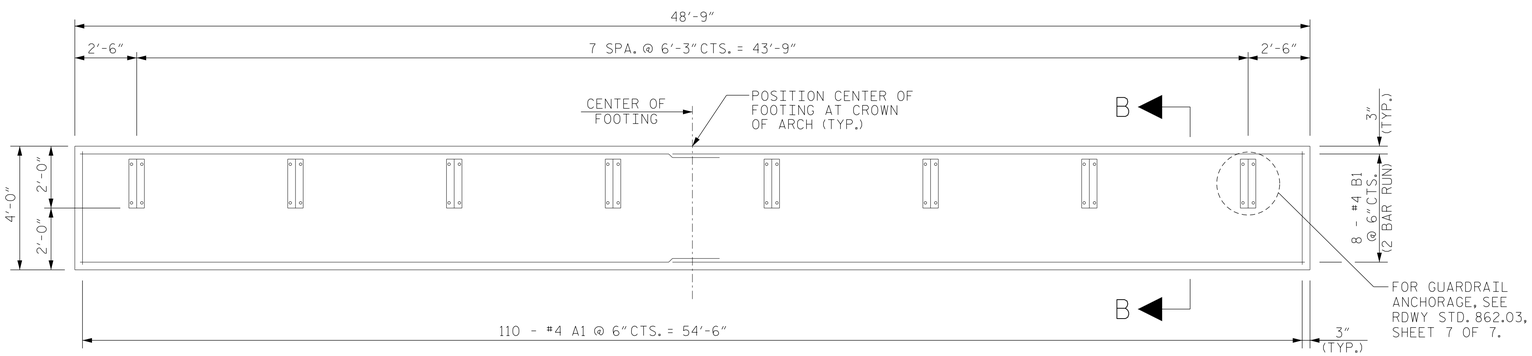

FOR GUARDRAIL ANCHORAGE, SEE RDWY STD. 862.03, SHEET 7 OF 7.

FOOTING PLAN

NOTE: MINIMUM LAP FOR B1 BARS IS 2'-0"

PROJECT NO. 17BP.5.R.88

WARREN COUNTY

STATION: 12+35.00 -L-

SHEET 4 OF 4

NORTH CAROLINA PROFESSIONAL SEAL 11725 ENGINEER DAVID R. RUGGLES

3/14/2022

DocuSigned by: David Ruggles C46276BDF41B422...

DOCUMENT NOT CONSIDERED FINAL UNLESS ALL SIGNATURES COMPLETED

STATE OF NORTH CAROLINA
DEPARTMENT OF TRANSPORTATION
RALEIGH

GUARDRAIL ASSEMBLY DETAILS

STEWART
Firm License No. C-1051
223 S. West St.
Suite 1100
Raleigh, NC 27603
T 919.380.8750
www.stewartinc.com

REVISIONS						SHEET NO.
NO.	BY:	DATE:	NO.	BY:	DATE:	C-4
1			3			TOTAL SHEETS
2			4			5

DRAWN BY:	E. PHELPS	DATE :	4/18
CHECKED BY:	D. RUGGLES	DATE :	4/18
DESIGN ENGINEER OF RECORD:	D. RUGGLES	DATE :	4/18

17BP.5.R.88
3/14/2022
...\400.004_Warren.135_SMU_GRA1_C-4.dgn
USER:default